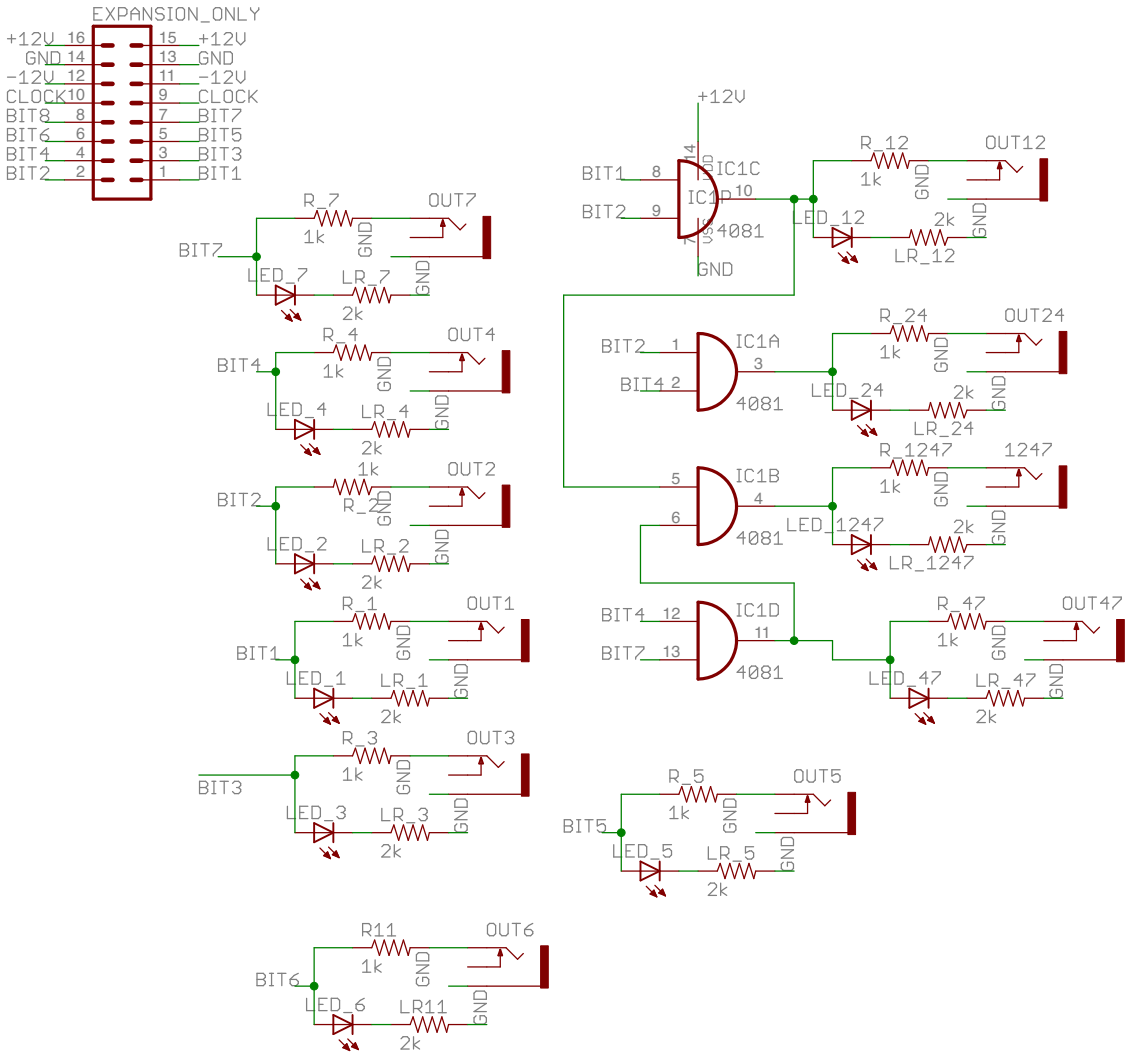
EXPANSION_ONLY
+12V 16
GND 14
-12V 12
CLOCK 10
BIT8 8
BIT6 6
BIT4 4
BIT2 2
15 +12V
13 GND
11 -12V
9 CLOCK
7 BIT7
5 BIT5
3 BIT3
1 BIT1
+12V
BIT1 8
BIT2 9
IC1C
IC1D
4081
GND
R_12
1k
OUT12
LED_12
2k
LR_12
BIT7
R_7
OUT7
LED_7
LR_7
BIT4
R_4
OUT4
LED_4
LR_4
BIT2
R_2
OUT2
LED_2
LR_2
BIT1
R_1
OUT1
LED_1
LR_1
BIT3
R_3
OUT3
LED_3
LR_3
BIT2 1
BIT4 2
IC1A
3
R_24
OUT24
LED_24
LR_24
5
6
IC1B
4
R_1247
1247
LED_1247
LR_1247
BIT4 12
BIT7 13
IC1D
11
R_47
OUT47
LED_47
LR_47
BIT5
R_5
OUT5
LED_5
LR_5
BIT6
R11
OUT6
LED_6
LR11
GND