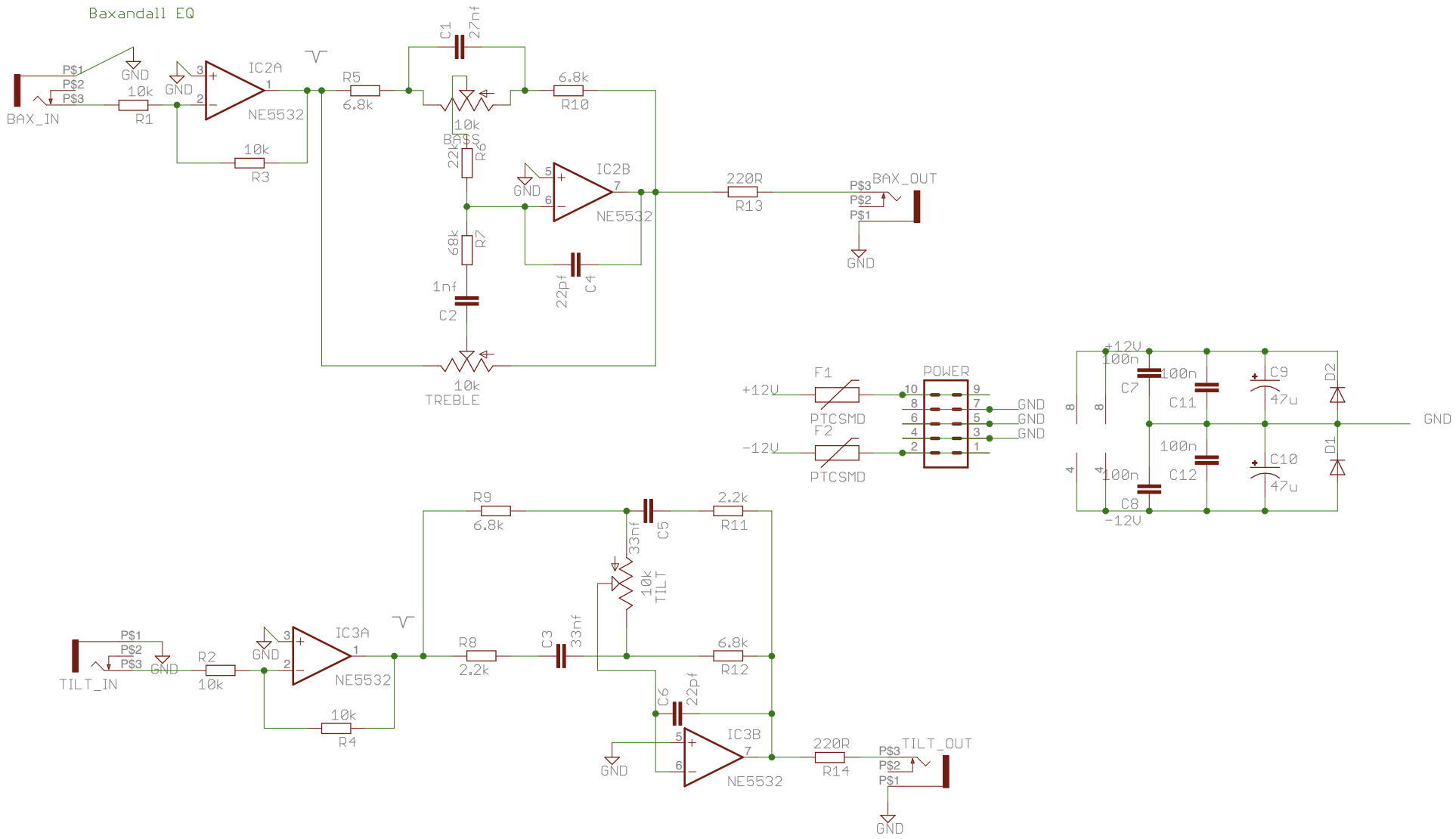

Baxandall EQ
BAX_IN
P$1
P$2
P$3
GND
10k
R1
IC2A
NE5532
10k
R3
R5
6.8k
C1
27nf
10k
BASS
22k
R6
6.8k
R10
IC2B
NE5532
68k
R7
1nf
C2
22pf
C4
10k
TREBLE
220R
R13
BAX_OUT
F1
PTCSMD
F2
PTCSMD
+12V
-12V
POWER
100n
C7
C11
C9
47u
D2
C12
C10
D1
C8
R9
6.8k
C5
33nf
2.2k
R11
10k
TILT
TILT_IN
R2
10k
IC3A
NE5532
10k
R4
R8
2.2k
C3
33nf
6.8k
R12
C6
22pf
IC3B
NE5532
220R
R14
TILT_OUT